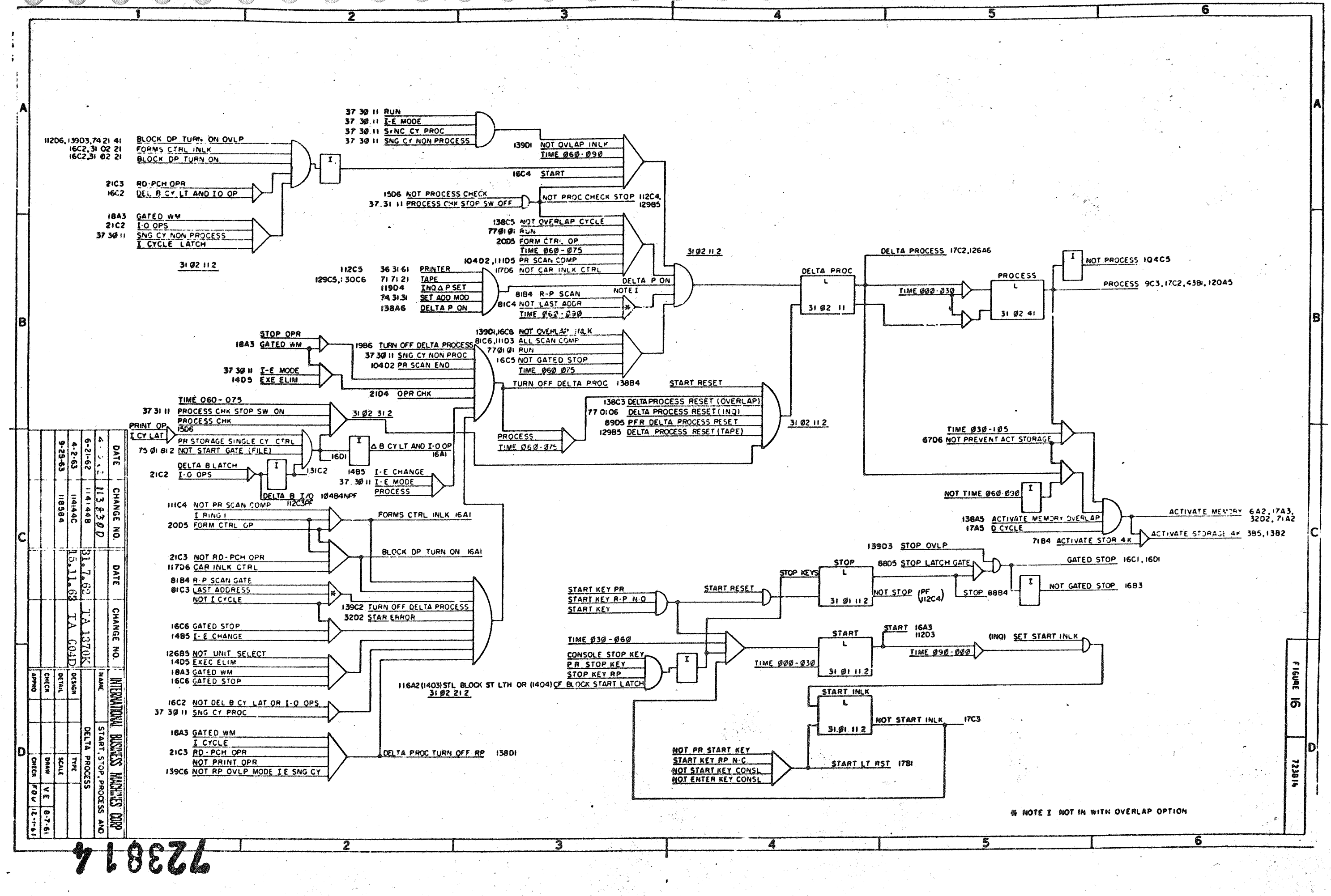

DATE	CHANGE NO.	DATE	CHANGE NO.
4-[illegible]	113830D		
6-21-62	114148	31.7.62	TA 1370K
4-2-63	114144C	15.11.63	TA C04D
9-25-63	118584		

INTERNATIONAL BUSINESS MACHINES CORP

NAME: START, STOP, PROCESS AND DELTA PROCESS

DESIGN | TYPE | DETAIL | SCALE | CHECK | DRAW VE 8-7-61 | APPRO | CHECK FOU 12-1-61

FIGURE 16

723814

723814