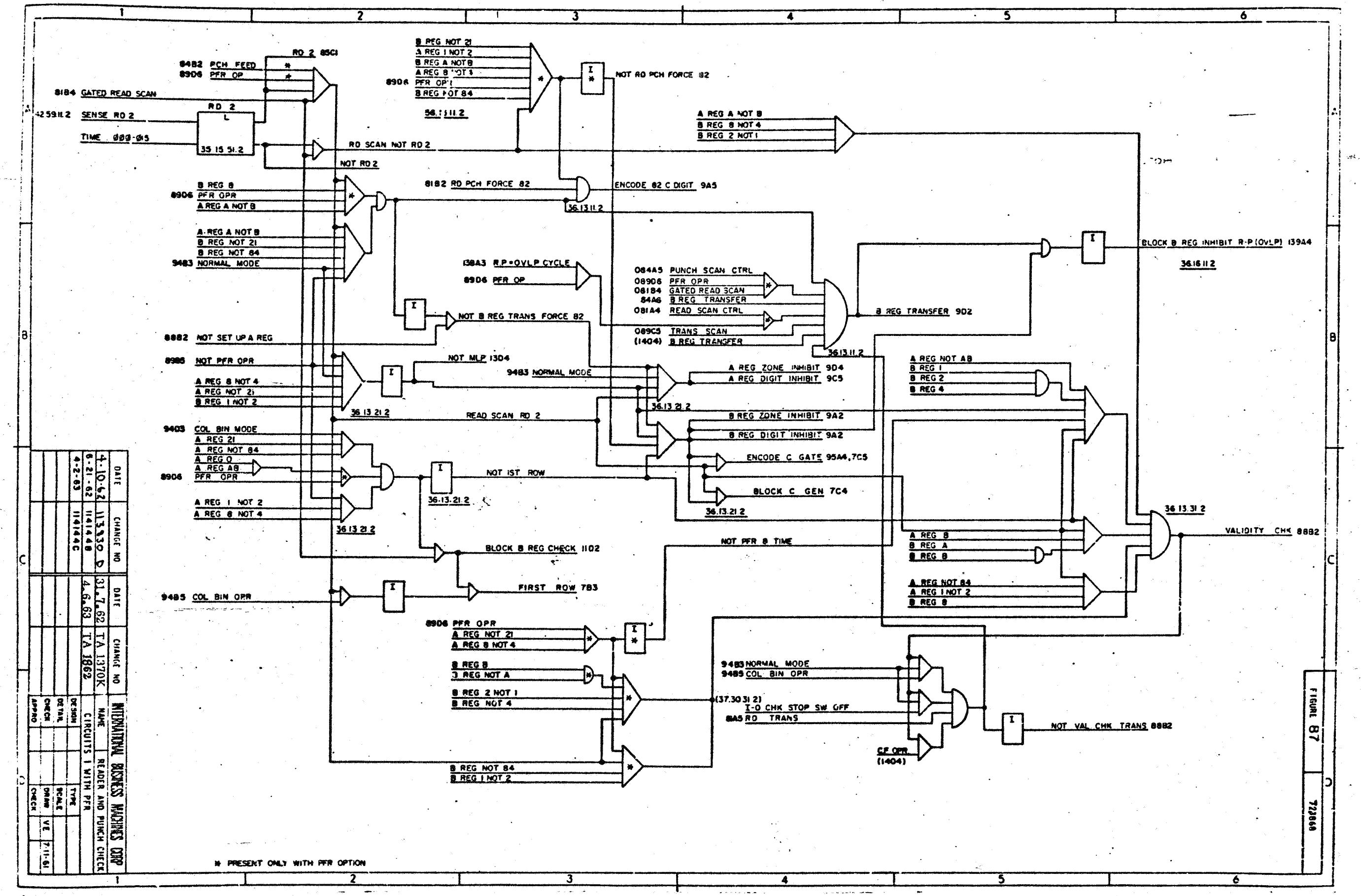


| DATE | CHANGE NO | DATE | CHANGE NO |
|---|---|---|---|
| 4-10-62 | 113330 D | 31.7.62 | TA 1370K |
| 6-21-62 | 114144B | 4.6.63 | TA 1862 |
| 4-2-63 | 114144C | | |

INTERNATIONAL BUSINESS MACHINES CORP

NAME: READER AND PUNCH CHECK

CIRCUITS 1 WITH PFR

DESIGN / DETAIL / CHECK / APPRO / TYPE / SCALE / DRAW / CHECK / VE 7-11-61

723868

1862