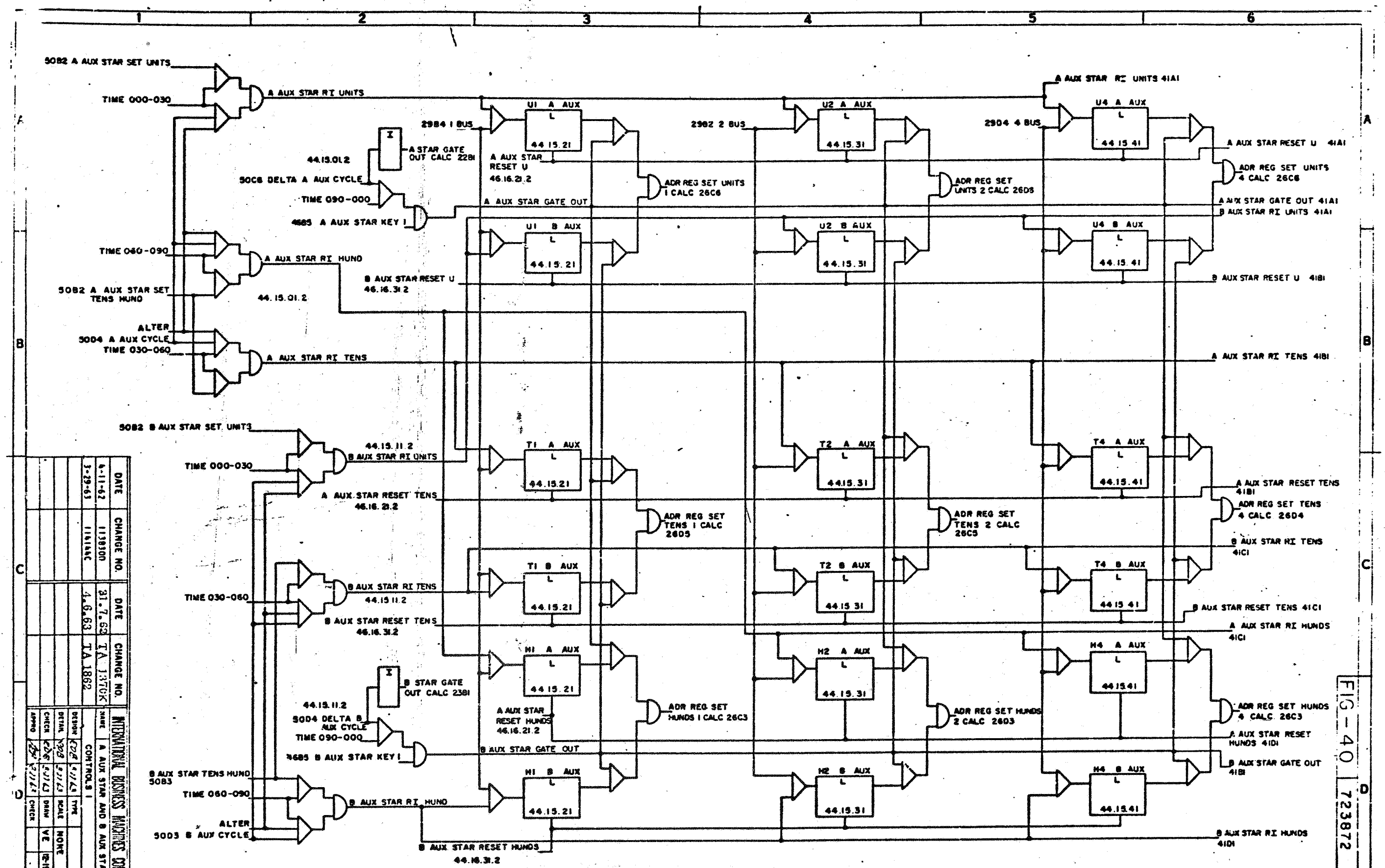

DATE	CHANGE NO.	DATE	CHANGE NO.
4-11-62	113830D	31.7.62	TA 1370K
3-29-63	114144C	4.6.63	TA 1862

INTERNATIONAL BUSINESS MACHINES CORP

NAME: A AUX STAR AND B AUX STAR

CONTROLS 1

DESIGN: EDB 4/11/63 TYPE

DETAIL: EDB 4/11/63 SCALE: NONE

CHECK: EDB 4/11/63 DRAW: VE 12-15-62

APPRO: EDB 4/11/63 CHECK

FIG-40 723872

723872

1862