TAG DATE
G16.4.63 TA 1815A
H 12.11.63 TA 604A

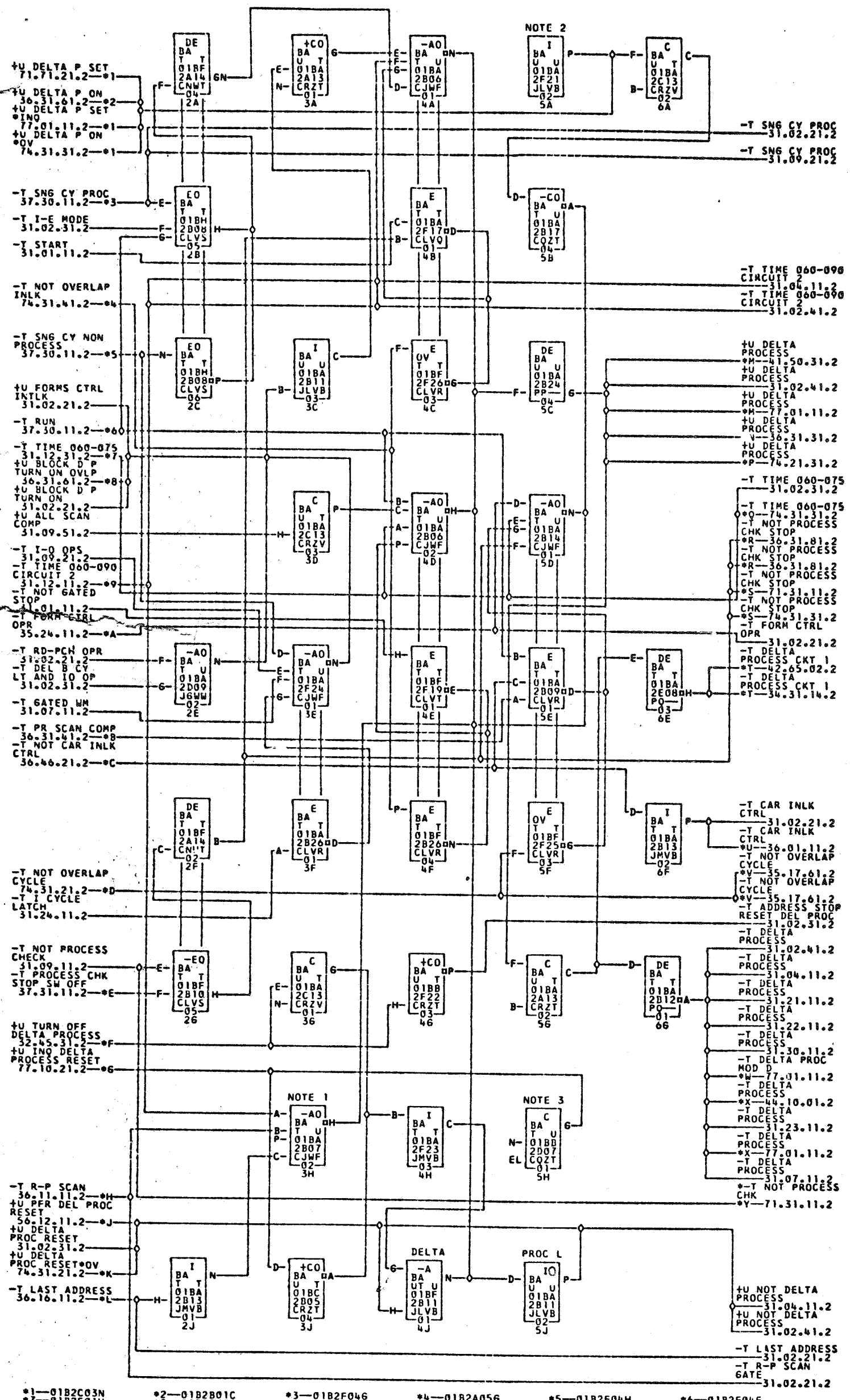

COMMENTS
NOTE 1 — REMOVE CARD WITH OVERLAP OPTION
NOTE 2 — USED FOR LOAD ONLY
NOTE 3-USED FOR LOAD ONLY
SIGNALS PRECEDED BY AN ASTERISK INDICATE DIRECT CABLE EXPANSION.

TAG	DATE	E.C.NO.	TAG	DATE	E.C.NO.	TAG	DATE	E.C.NO.	TAG	DATE	E.C.NO.
A	12-15-61	113530	B	03-05-62	114127	C	04-04-62	114133	D	06-04-62	114146
E	10-23-62	114164	F	12-10-62	114178	G	01-30-63	114182	H	09-16-63	118575B

0729052