0724590 STORAGE ADDRESS H1 LOCATION C11-D11 1401 BA 32.37.11.2

TAG DATE

A 28.5.62
TA 1344

B 12.3.63
TA 1775

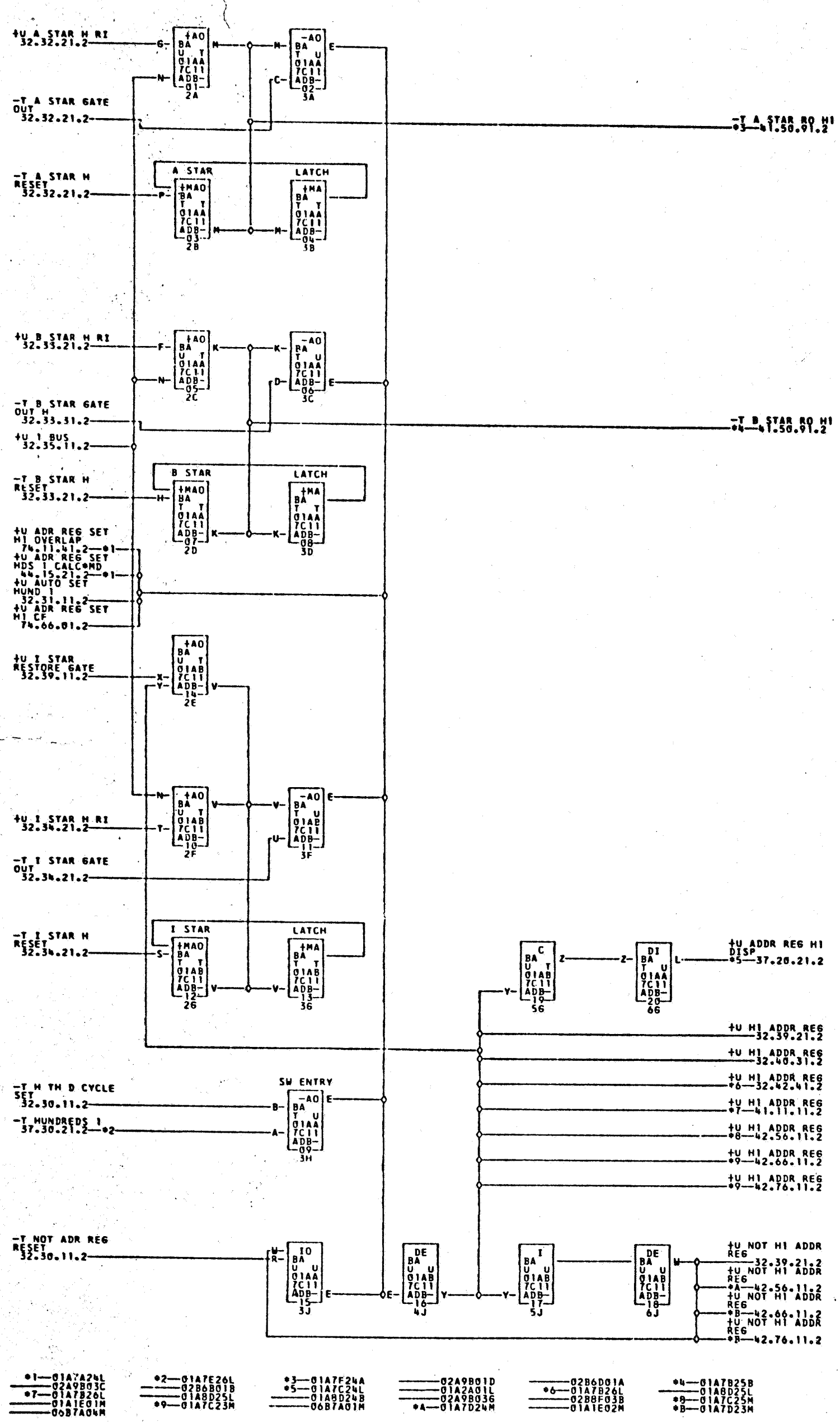


COMMENTS

| TAG | DATE | E.C.NO. | TAG | DATE | E.C.NO. | TAG | DATE | E.C.NO. | TAG | DATE | E.C.NO. |
|---|---|---|---|---|---|---|---|---|---|---|---|
| A | 12-20-61 | 1122696 | B | 12-14-62 | 116749F | | | | | | |

72 4590