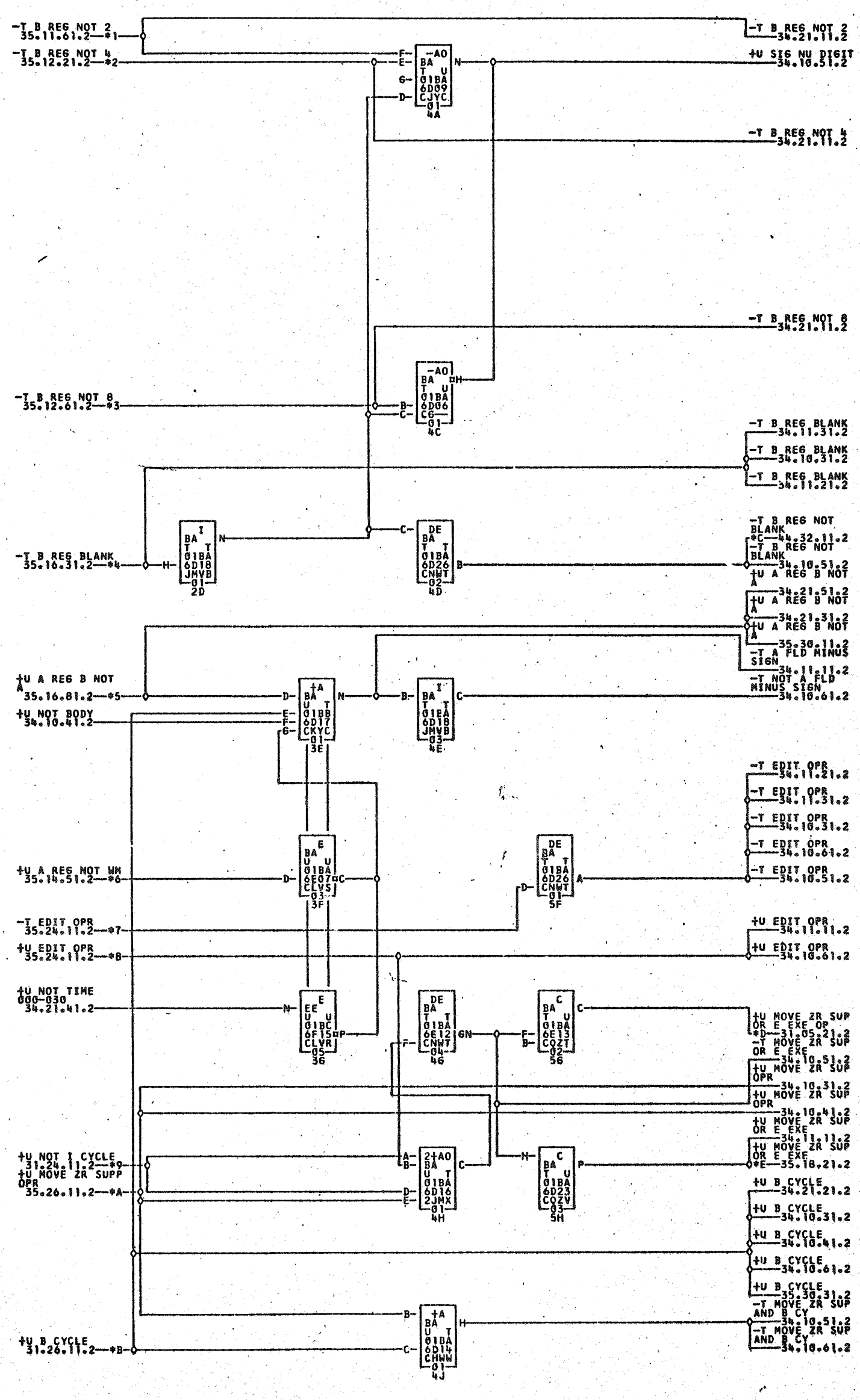

*1—01B6E02M *2—01B6E02L *3—01B6E02K *4—01B6B02R *5—01B6B02C *6—01B6A01M
*7—01B6D01N *8—01B6D01B *9—01B6B01A *A—01B6D01F *B—01B6B01B *C—01B6F03M
02A9D17D 02A8B25M *D—01B6E016 *E—01B6C02K 01A3B26K

TAG	DATE
B	12.7.62
TA	1370F
C	5.3.63
TA	1771A

729173

COMMENTS

TAG	DATE	E.C.NO.	TAG	DATE	E.C.NO.	TAG	DATE	E.C.NO.	TAG	DATE	E.C.NO.
A	12-18-61	113530	B	05-01-62	114138	C	12-11-62	114178			