0722344 PRINT BUFFER TENS DRIVE 1401 BA 36.37.91.2

TAG DATE

C 22.2.62
TA 1179

D 12.3.63
TA 1775

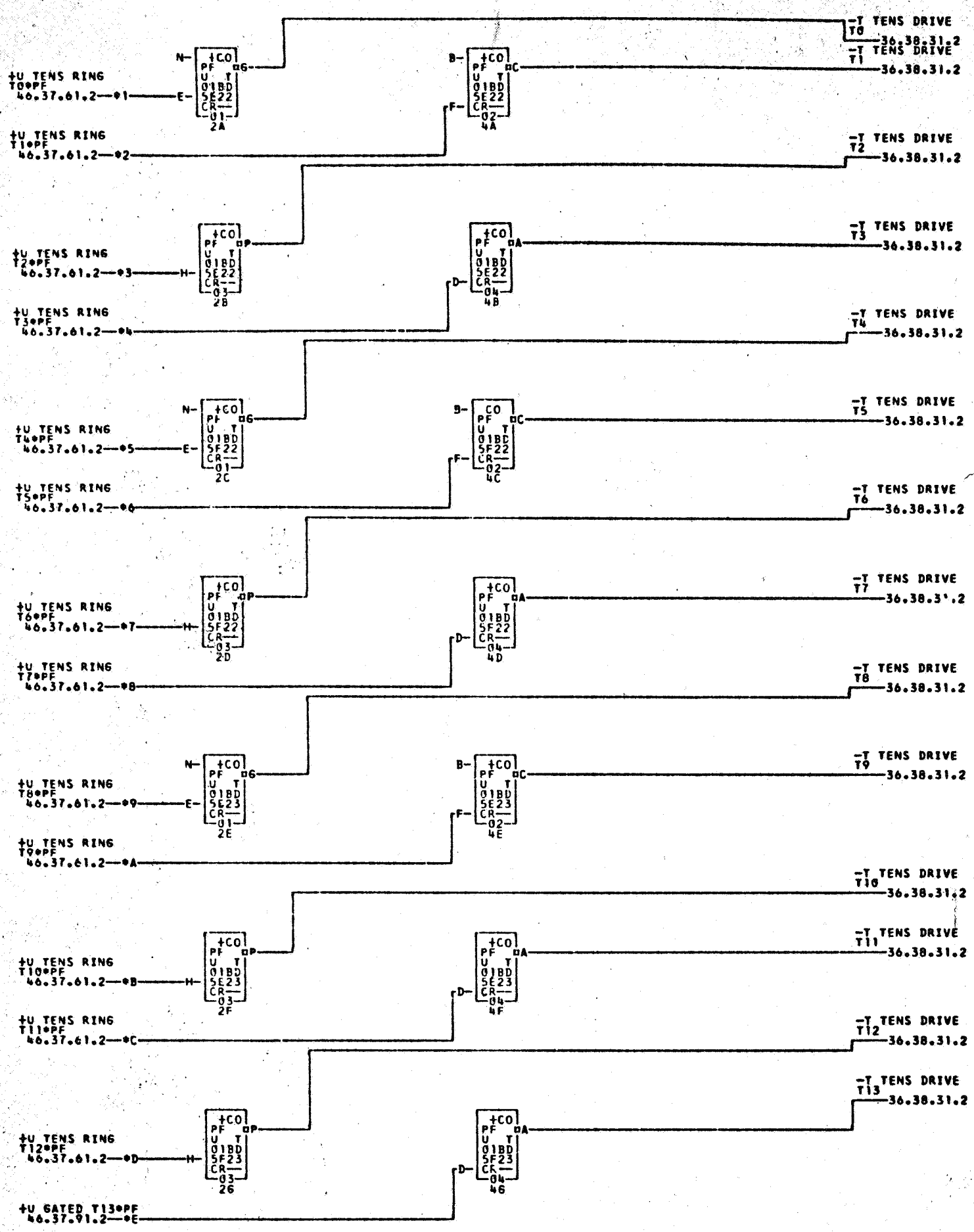

*1—01B5A02A *2—01B5A02B *3—01B5A02C *4—01B5A02D *5—01B5A02E *6—01B5A02F
*7—01B5A02G *8—01B5A02H *9—01B5A02K *A—01B5A02L *B—01B5A02M *C—01B5A02N
*D—01B5A02P *E—01B5A02Q

722344

COMMENTS	TAG	DATE	E.C.NO.	TAG	DATE	E.C.NO.	TAG	DATE	E.C.NO.	TAG	DATE	E.C.NO.
ADD E22 E23 F22 F23 FOR PRINT STORAGE	A	10-01-60	109501J	B	11-07-60	109524	C	12-06-61	113422	D	12-10-62	116749A