CARD CODE	STANDARD CODE	370978
CK **	2-7045	

SHEET 24 OF 24 EC. 110190

CTDL 3 WAY AND NPN
FIELD REPLACEMENT

DISCONTINUED

891071

CAP CONFIGURATION

CIRCUIT NAME	CAP CODE	ASM NO	TEST SPEC
CTDL 3 WAY AND NPN EXTENDED INPUT	YC	371072	891072
CTDL 3 WAY AND NPN	WV	371254	891071
CTDL 3 WAY AND NPN-1 LOAD	VU	371269	891071
CTDL 3 WAY AND NPN-NO LOAD	WF	371270	891071

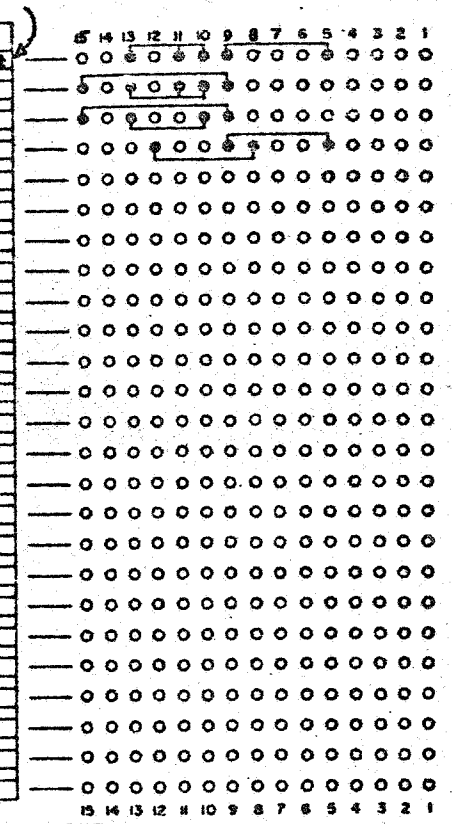

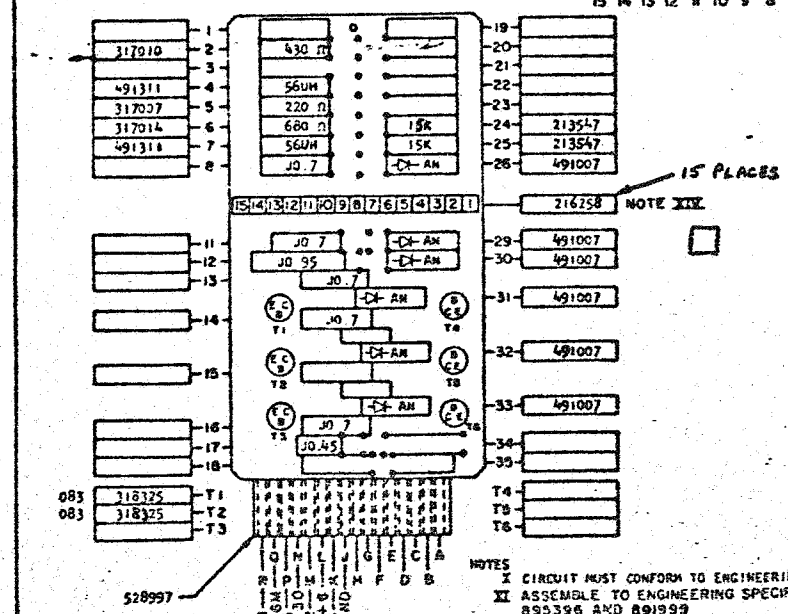

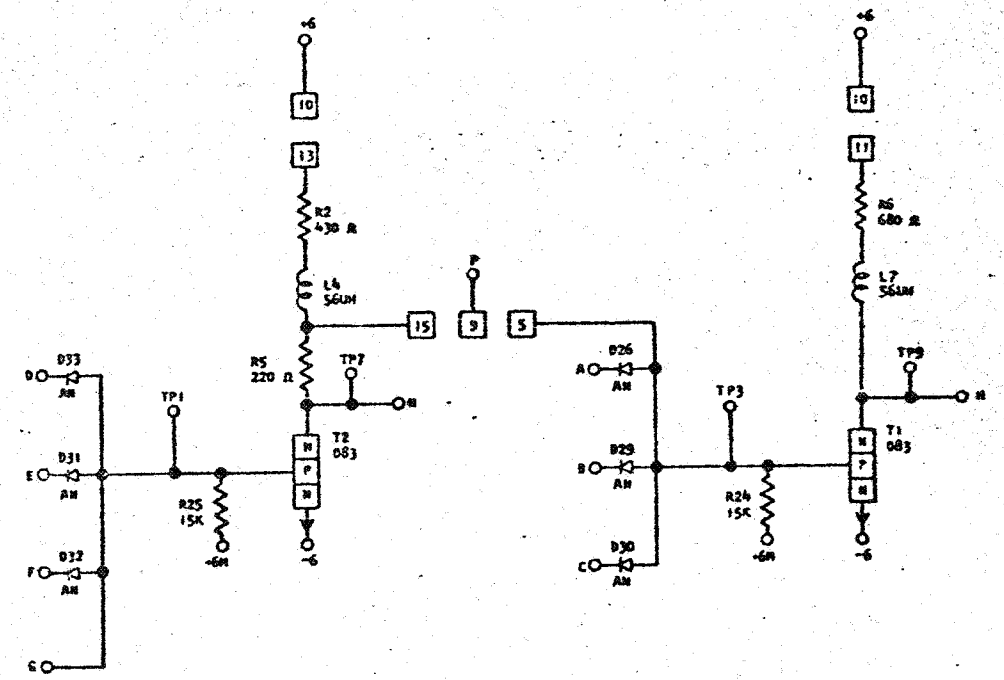

NOTES
X CIRCUIT MUST CONFORM TO ENGINEERING SPECIFICATION 891071
XI ASSEMBLE TO ENGINEERING SPECIFICATION 895396 AND 891999
XII ALL RESISTORS ARE 1/2 WATT AND ±5% UNLESS OTHERWISE NOTED
XIII "J" IN BLOCK DENOTES BARE WIRE JUMPER, 491296
XIV REFERENCE-216259 MALE CONTACT STRIP TO BE USED AS REQUIRED TO PROGRAM DESIRED CAP CODE

C

DPD CIRCUIT & PACKAGING STANDARD	
APPROVAL	DATE
H D Hanford	7-6-60

370978

INTERNATIONAL BUSINESS MACHINES CORP	DATE	CHANGE NO.	APPROVAL	DATE	CHANGE NO.	APPROVAL	DEVELOPMENT NO.
NAME CARD ASM TSTR-CTDL 3 WAY AND NPN	9-30-60	109642	8208				X0662
DESIGN / TYPE SMS	11-23-60	0110081	IWB				
DETAIL / SCALE NONE		110190	8208				
CHECK / DRAWN MDF 7-11-60							
APPROV / CHECK							

370978