370980

CARD CODE	STANDARDS CODE	370980
CR **	2-7045	

CTDL ONE WAY NPN
FIELD REPLACEMENT

DISCONTINUED

CAP CONFIGURATION

CIRCUIT NAME	CAP CODE	ASM NO	TEST SPEC
CTDL ONE WAY-4 LOADS	ZV	371274	891071
CTDL ONE WAY NPN-2 LOADS	ZT	371275	891071
CTDL ONE WAY NPN-NO LOAD	—	371276	891071
CTDL ONE WAY NPN-1 LOAD	YG	371277	891071

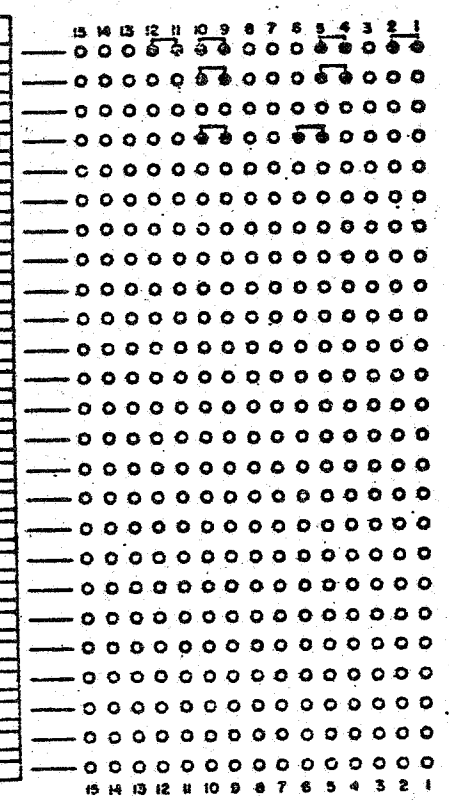

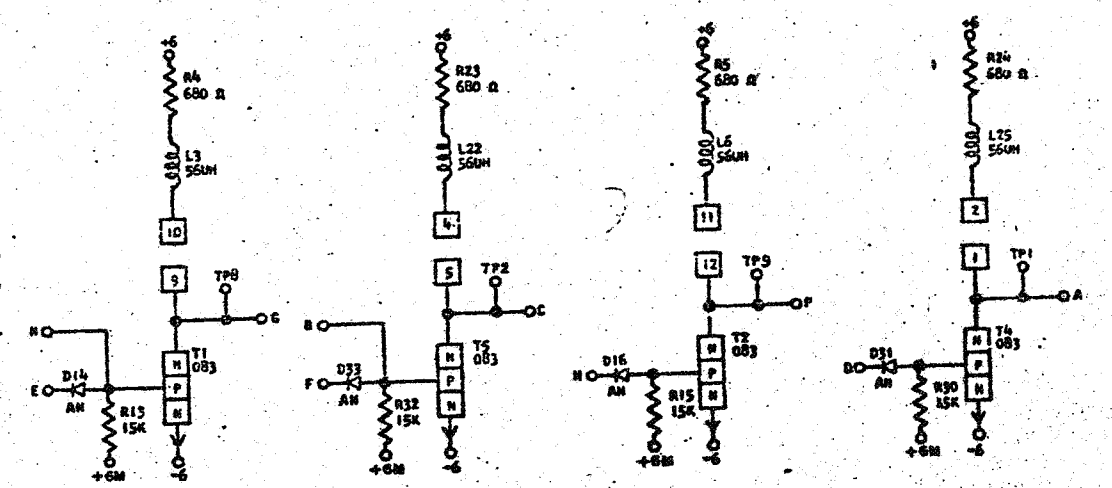

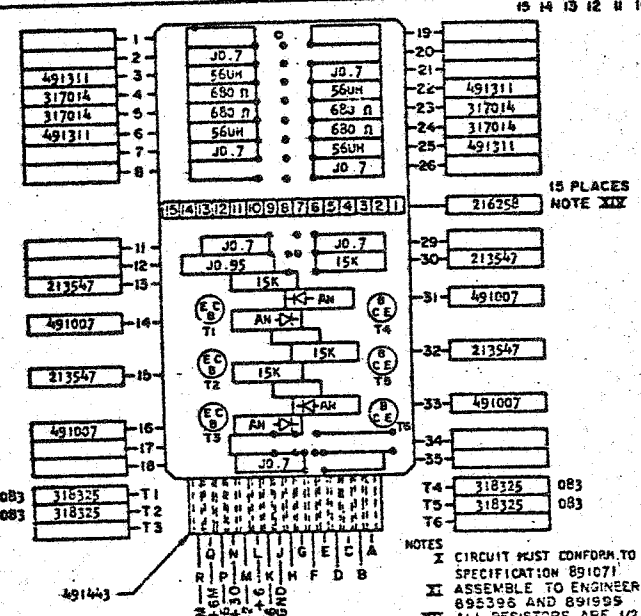

NOTES
X CIRCUIT MUST CONFORM TO ENGINEERING SPECIFICATION 891071
XI ASSEMBLE TO ENGINEERING SPECIFICATION 895396 AND 891999
XII ALL RESISTORS ARE 1/2 WATT AND ±5% UNLESS OTHERWISE NOTED
XIII "J" IN BLOCK DENOTES BARE WIRE JUMPER, 491296
XIV REFERENCE-216258 MALE CONTACT STRIP TO BE USED AS REQUIRED TO PROGRAM DESIRED CAP CODE

C

DPD CIRCUIT & PACKAGING STANDARD	
APPROVAL	DATE
H. D. Hanford	7-6-60

370980

INTERNATIONAL BUSINESS MACHINES CORP.	DATE	CHANGE NO.	APPROVAL	DATE	CHANGE NO.	APPROVAL	DEVELOPMENT NO.
NAME CARD ASM TSTR - CTDL	8-4-60	109542	DWB				XD666
ONE WAY NPN	11-4-60	D109900	IWB				
SCALE NONE	12-1-60	110517	IWB				
DRAWN							
APPROVED							

370980