STANDARDS CODE	CARD CODE	729925
729925	D H F -	

REFERENCE DRAWING

SEE PRODUCTION DRAWING 370350

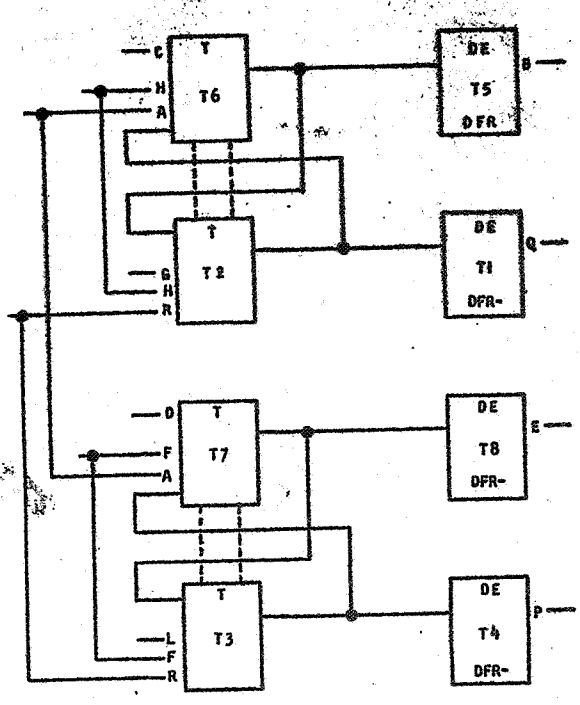

SDTDL TRIGGER AND DRIVER

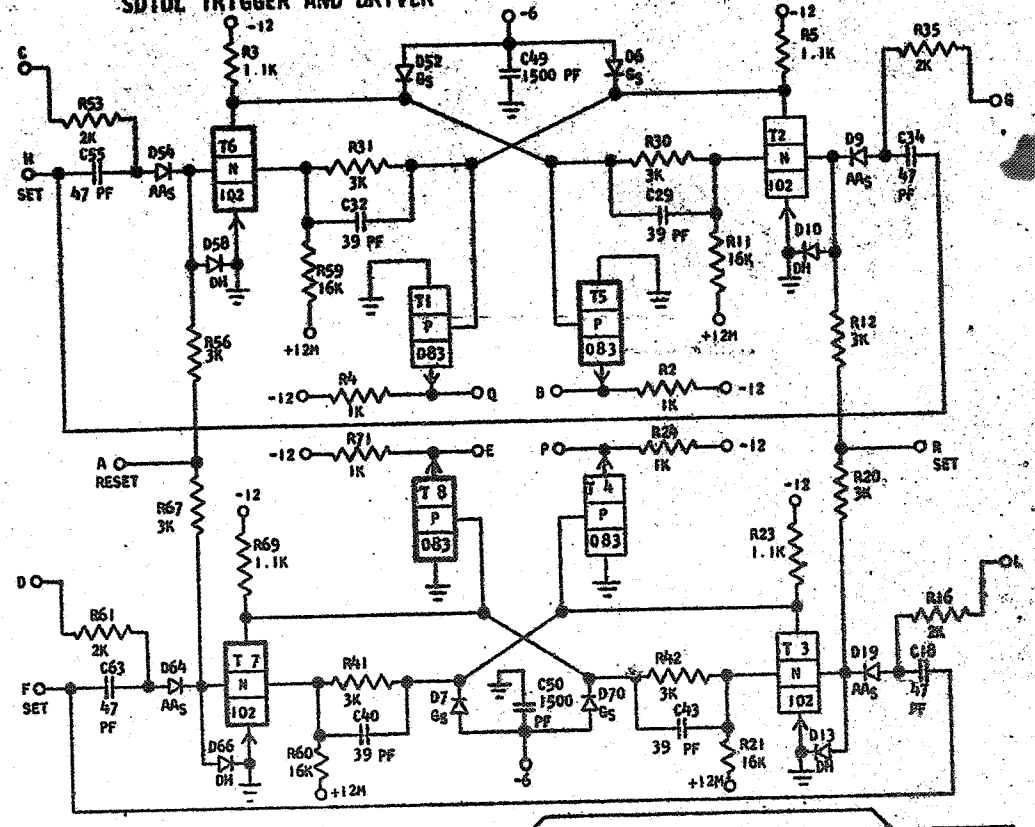

SEQUENCE OF OPERATION

THE RESET INPUT RESPONDS TO A NEGATIVE VOLTAGE LEVEL. RESETING TURNS T6, T7, T5 AND T8 ON AND THE OTHER TRANSISTORS WILL BE IN THE OPPOSITE STATE. THE GATES ARE CONDITIONED BY A POSITIVE VOLTAGE LEVEL AND THE AC SET IS RESPONSIVE TO A POSITIVE VOLTAGE LEVEL. THUS, TO SET THE TRIGGER MEANS TO TURN OFF THE TRANSISTOR WHOSE GATE AND SET ARE BOTH POSITIVE. THE DC SET RESPONDS TO A NEGATIVE VOLTAGE LEVEL. THUS WHEN THE TRIGGER IS DC SET, T2, T3, T1 AND T4 WILL BE ON.

DELAY - NSEC

	TON		TRISE		TOFF		TFALL	
	MAX	MIN	MAX	MIN	MAX	MIN	MAX	MIN
BINARY OPERATION:	123	36	63	16	240	115	200	95
GATED:	135	40	48	16	205	82	160	61

NOTE: TON IS DEFINED AS THE DELAY FROM THE TIME AN AC INPUT SIGNAL ARRIVES UNTIL THE "OFF" TRANSISTOR HAS TURNED ON COMPLETELY. THIS IS MEASURED FROM THE TIME THE AC INPUT HAS SHIFTED 10% IN THE POSITIVE DIRECTION UNTIL THE "OFF" TRANSISTOR HAS SHIFTED 90% POSITIVE.

TOFF IS MEASURED FROM THE TIME AN AC INPUT HAS SHIFTED 10% POSITIVE UNTIL THE OUTPUT OF THE "ON" TRANSISTOR HAS SHIFTED 90% NEGATIVE.

PINS	SIGNAL NAME		WAVE SHAPE		LEVELS MIN	LEVELS MAX
C,D	Y	GATE		UP	-.65	-.1
				DOWN	-5.81	-7.64
H,F	Y	AC SET		UP	-.65	-.1
				DOWN	-5.81	-7.64
R	Y	DC SET		UP	-.65	-.1
				DOWN	-5.81	-7.64
A	Y	RESET		UP	-.65	-.1
				DOWN	-5.81	-7.64
Q,P	Y	OUTPUT		UP	-1.1	-.22
				DOWN	-5.83	-7.3
B,E	Y	OUTPUT		UP	-1.1	-.22
				DOWN	-5.83	-7.3
G,L	Y	GATE		UP	-.65	-.1
				DOWN	-5.81	-7.64

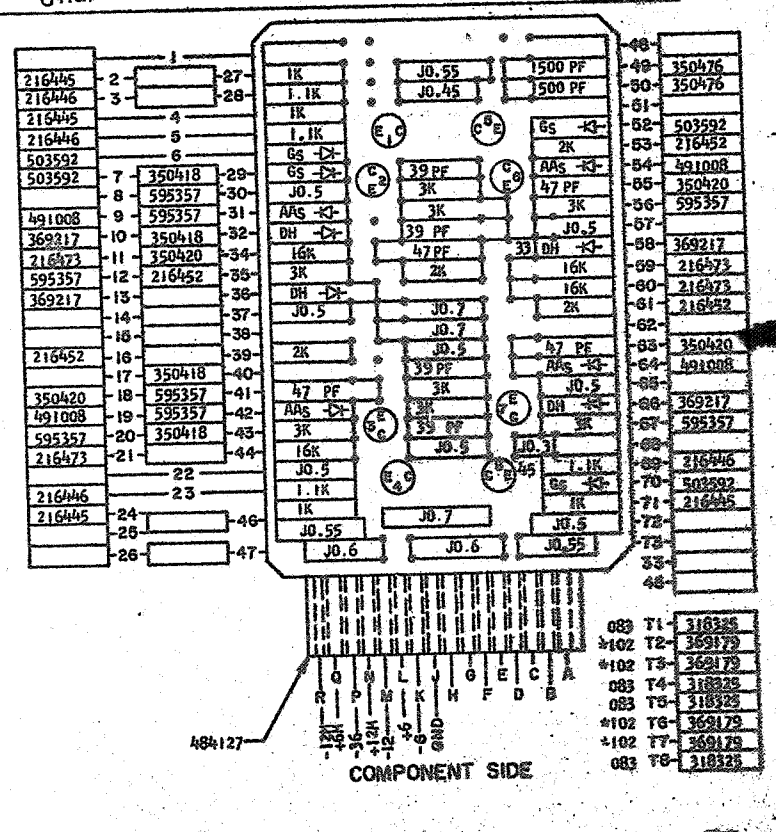

CIRCUIT AND PACKAGING STANDARD	
APPROVAL	DATE
ABC	4-2-62

INTERNATIONAL BUSINESS MACHINES CORP.					DATE	CHANGE NO.	APPROVAL	DATE	CHANGE NO.	APPROVAL	DEVELOPMENT NO.
NAME	CARD ASM TSTR-SDTDL TRIGGER AND DRIVER				4-2-62	115599					729925
DESIGN			MODEL	SMS							
DETAIL	RD	3-1-62	SCALE	NONE							
CHECK	WH	3-1-62	DRAW	LIG	3-7-62						
APPRO			CHECK								

C