CARD CODE	STANDARDS CODE	370977
CJ **	2-7045	

DISCONTINUED

SHEET 37 OF 37 EC. 110166

CTDL 3 WAY AND PNP
FIELD REPLACEMENT

CIRCUIT NAME	CAP CODE	ASM NO	TEST SPEC
CTDL 3 WAY AND EXTENDED INPUTS	YC	371071	891071
CTDL 3 WAY AND PNP	WV	371253	891071
CTDL 3 WAY AND PNP-1 LOAD	VU	371267	891071
CTDL 3 WAY AND PNP-NO LOAD	WF	371268	891071

CAP CONFIGURATION

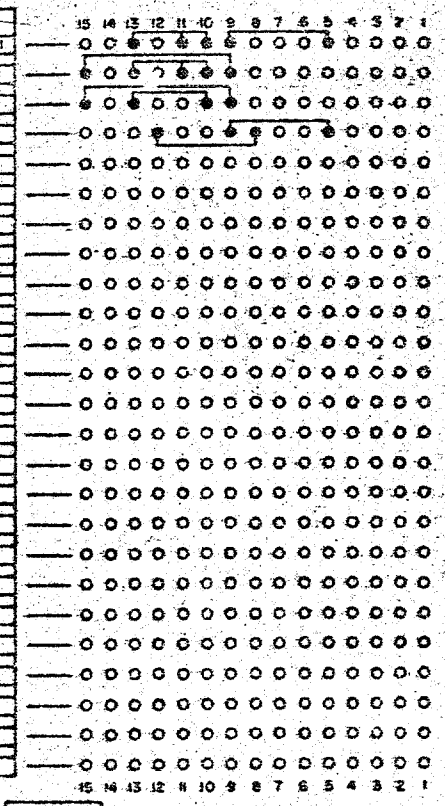

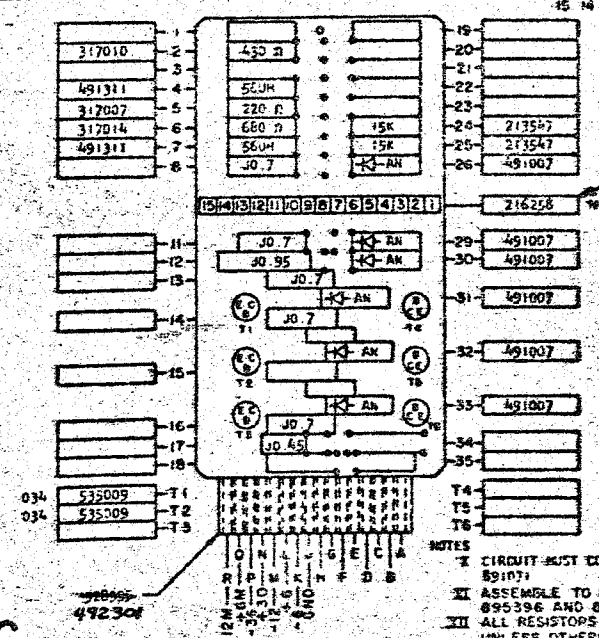

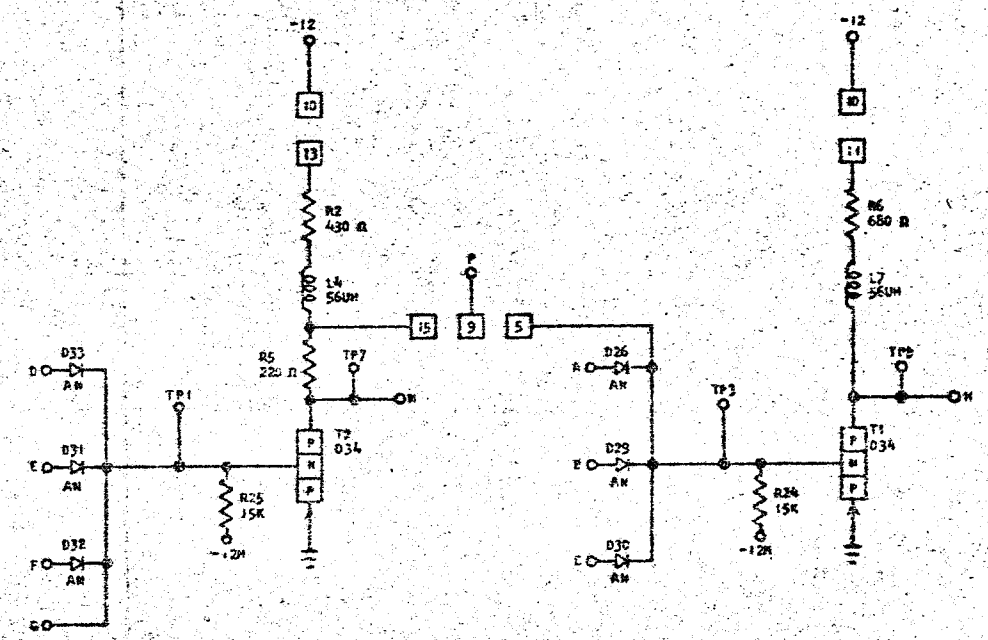

NOTES

X CIRCUIT MUST CONFORM TO ENGINEERING SPECIFICATION 891071

XI ASSEMBLE TO ENGINEERING SPECIFICATION 895396 AND 891999

XII ALL RESISTORS ARE 1/2 WATT AND ±5% UNLESS OTHERWISE NOTED

XIII "J" IN BLOCK DENOTES BARE WIRE JUMPER, 491296

XIV REFERENCE-216259 MALE CONTACT STRIP TO BE USED AS REQUIRED TO PROGRAM DESIRED CAP CODE

C

DPD CIRCUIT & PACKAGING STANDARD	
APPROVAL	DATE
H E Hoff	7-6-60

370977

INTERNATIONAL BUSINESS MACHINES CORP				DATE	CHANGE NO	APPROVAL	DATE	CHANGE NO	APPROVAL	DEVELOPMENT NO
NAME	CARD ASM TSTR - CTDL			8-4-60	109642	DWB				X0669
3 WAY AND PNP				9-30-60	D110081	IWB				
DESIGN		TYPE	SMS	12-14-60	110166	DWB				
DETAIL		SCALE	NONE							
CHECK	TGJ 8-1-60	DRAWN	NDE 7-8-60							
APPROV	SES 8-3-60	CHECK	[illegible] 7-12-60							

370977