STANDARDS CODE	CARD CODE	729852
729852	CR ZV	

REFERENCE DRAWING

SEE PRODUCTION DRAWING 371274

CTDL-ONE WAY NPN FOUR LOADS

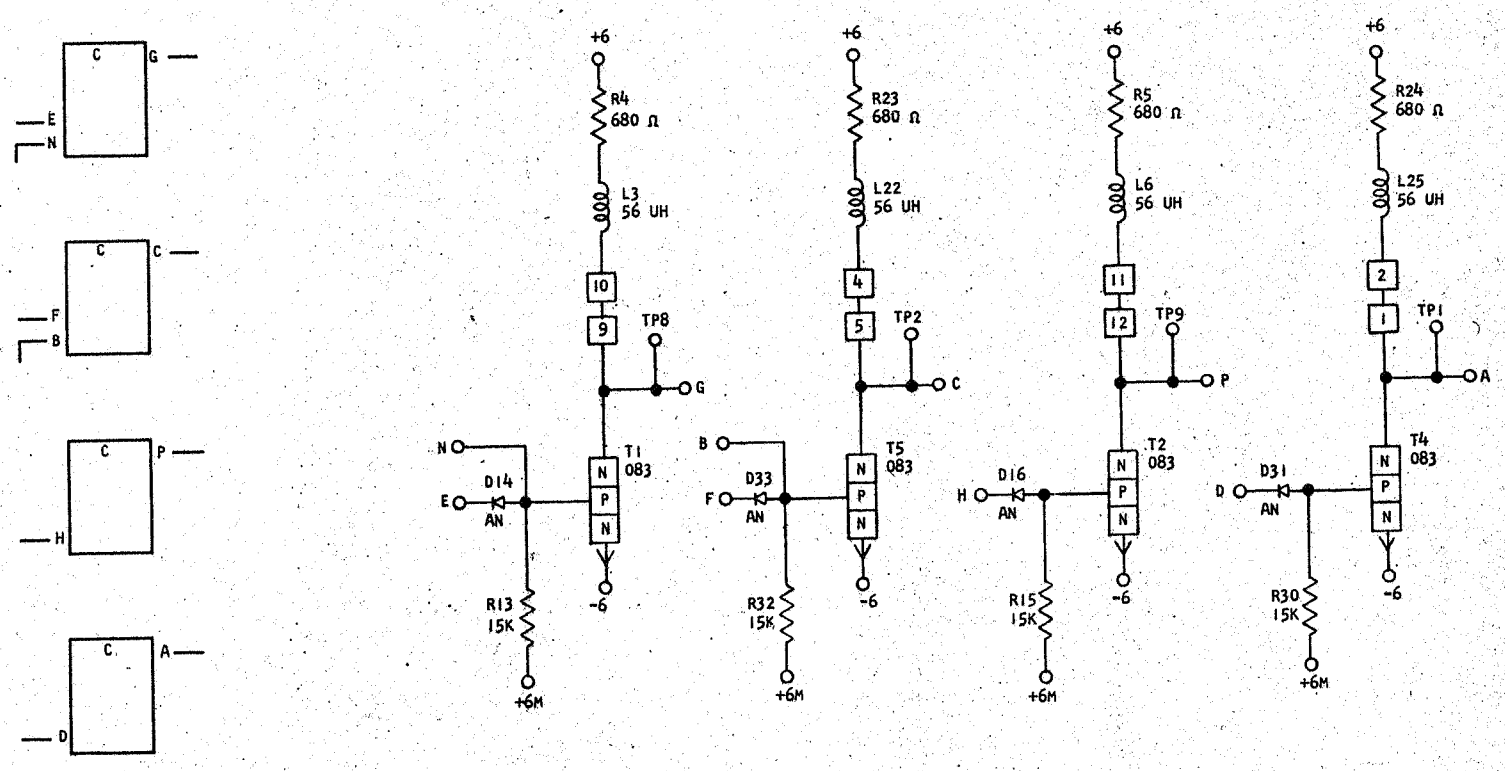

SEQUENCE OF OPERATION

1. UP INPUT TRANSISTOR ON OUTPUT DOWN
2. DOWN INPUT TRANSISTOR OFF OUTPUT UP
3. INPUTS ON EXTENDER CARD UP IN COINCIDENCE WITH UP INPUT ON CARD FOR DOWN OUTPUT
4. LOGIC BLOCKS MAY HAVE SYMBOLS OTHER THAN SHOWN

PINS		SIGNAL NAME	WAVE SHAPE		LEVELS MIN	LEVELS MAX
E, F, H, D	U	INPUT		UP	-5.26	0.24
				DOWN	-7.44	-12.5
N,B		EXTENDER INPUT		UP		-6.0
				DOWN		-12.5
G,C, P,A	T	OUTPUT		UP	1.44	6.24
				DOWN	-5.46	-6.24

DELAY - USEC

	MINIMUM	MAXIMUM
TURN ON	0.05	0.70
TURN OFF	0.05	1.50*

*THIS DELAY CAN OCCUR ONLY ON HEAVILY LOADED BLOCKS.

NOTE: THE ABOVE RANGES OF DELAYS ARE REPRESENTATIVE. SPECIFIC CIRCUIT APPLICATION AND/OR WIRING CAPACITANCE MAY RESULT IN DELAYS WHICH ARE OUT OF THE GIVEN RANGES. IN SUCH CASES, CARD REPLACEMENT SHOULD INDICATE IF THE CIRCUIT IS OUT OF SPECIFICATIONS. EXAMPLE: LOGIC BLOCK DRIVING EF "OR".

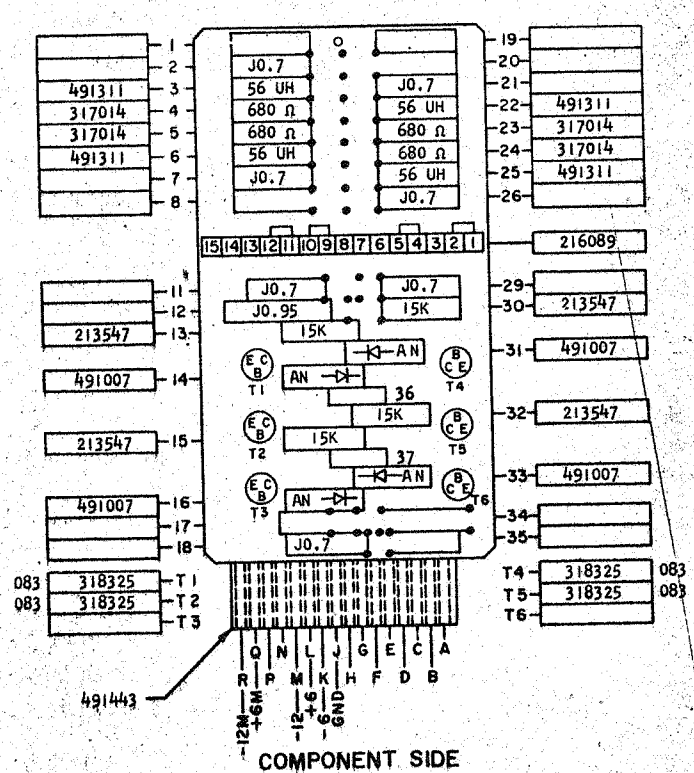

CIRCUIT AND PACKAGING STANDARD	
APPROVAL	DATE
ABC	4-2-62

INTERNATIONAL BUSINESS MACHINES CORP.						DATE	CHANGE NO.	APPROVAL	DATE	CHANGE NO.	APPROVAL	DEVELOPMENT NO.	729852
NAME	CARD ASM TSTR -CTDL- ONE WAY NPN FOUR LOADS					6 -62	115599						
DESIGN			MODEL	SMS									
DETAIL	RO	3-1-62	SCALE	NONE									
CHECK	WH	3-1-62	DRAW	LIG	3-17-62								
APPRO			CHECK										

C

729852