TAG DATE

H 18.6.63
TA 1859

J 12.7.63
TA 1859K

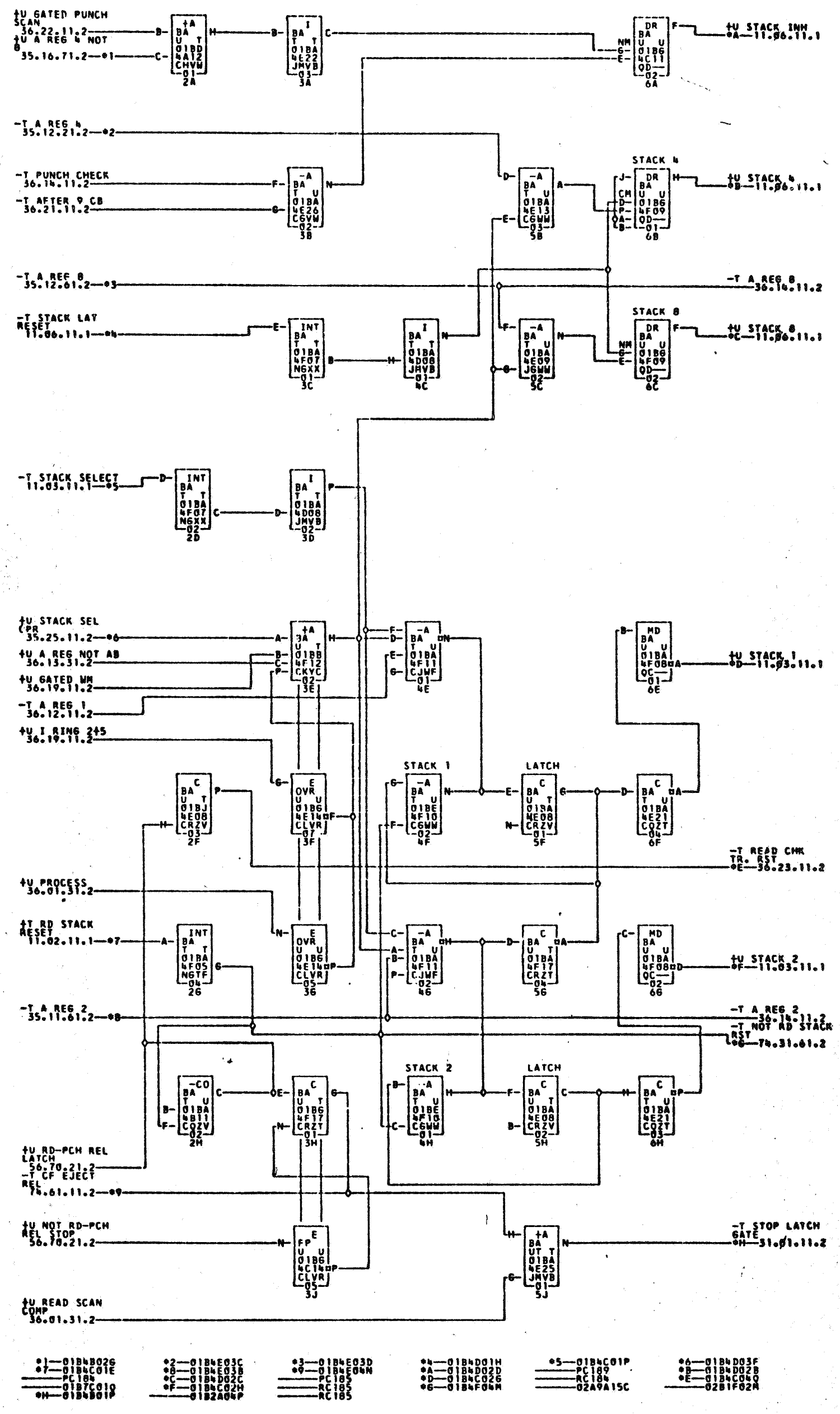

*1—01B4B02G *2—01B4E03C *3—01B4E03D *4—01B4D01H *5—01B4C01P *6—01B4D03F
*7—01B4C01E *8—01B4E03B *9—01B4E04M *A—01B4D02D *B—01B4D02B
PC184 *C—01B4D02C PC185 *D—01B4C02G PC189 *E—01B4C04Q
01B7C01Q *F—01B4C02H RC185 *G—01B4F04M RC184 02B1F02M
*H—01B4B01P 01B2A04P RC185 02A9A15C

COMMENTS

TAG	DATE	E.C.NO.	TAG	DATE	E.C.NO.	TAG	DATE	E.C.NO.	TAG	DATE	E.C.NO.
A	12-06-61	112269F	B	01-16-62	113530A	C	02-14-62	114242A	D	05-18-62	115303
E	06-04-62	114140A	F	10-25-62	116727	G	01-17-63	116787	H	02-28-63	117148
J	04-16-63	117475									

724664