0724248 WRITE GATING 1401 IO 70.51.21.2

TAG DATE

H 18.6.63
TA 1859

J 28.8.63
TA 1917A

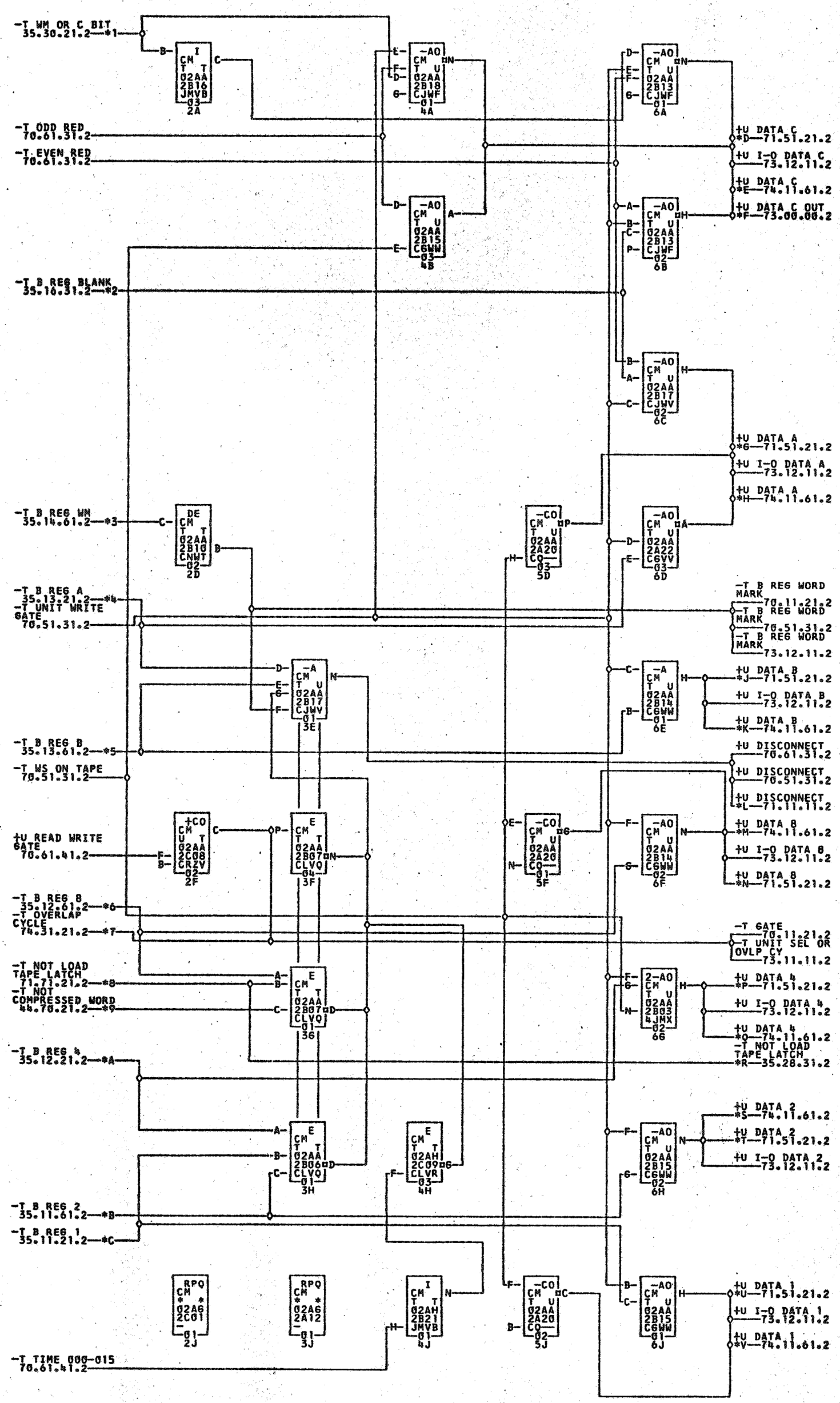

*1—02A2C23R	*2—02A2A26L	*3—02A2B24N	*4—02A2B24P	*5—02A2B24Q	*6—02A2C24R
*7—02A2B25G	*8—02A2C26A	*9—02A2A23D	*A—02A2C24Q	*B—02A2C24P	*C—02A2C24N
*D—02A2A25J	02A1D25J	*E—02A2B26Q	02B1F01Q	02B1B04Q	00XAE05Q
*F—02A2F25H	02TD-040	*G—02A2A25G	02A1D25G	*H—02A2B26N	02B1F01N
02B1B04N	00XAE05N	*J—02A2A25H	02A1D25H	*K—02A2B26P	02B1F01P
02B1B04P	00XAE05P	*L—02A2C26C	02A1C26C	*M—02A2B26M	02B1F01M
02B1B04M	00XAE05M	*N—02A2A25F	02A1D25F	*P—02A2A25E	02A1D25E
*Q—02A2B26L	02B1F01L	02B1B04L	00XAE05L	*R—02A2C23N	02A0J02N
*S—02A2B26K	02B1F01K	02B1B04K	00XAE05K	*T—02A2A25D	02A1D25D
*U—02A2A25C	02A1D25C	*V—02A2B26J	02B1F01J	02B1B04R	00XAE05R

COMMENTS

TAG	DATE	E.C.NO.	TAG	DATE	E.C.NO.	TAG	DATE	E.C.NO.	TAG	DATE	E.C.NO.
A	06-12-61	110320V	B	07-10-61	110324K	C	08-11-61	110324N	D	12-06-61	113422
E	02-12-62	114239	F	08-07-62	116230	G	12-10-62	116749B	H	03-14-63	117144
J	04-19-63	117484									